DATE	REV.	DESCRIPTION	DR	CK	REL

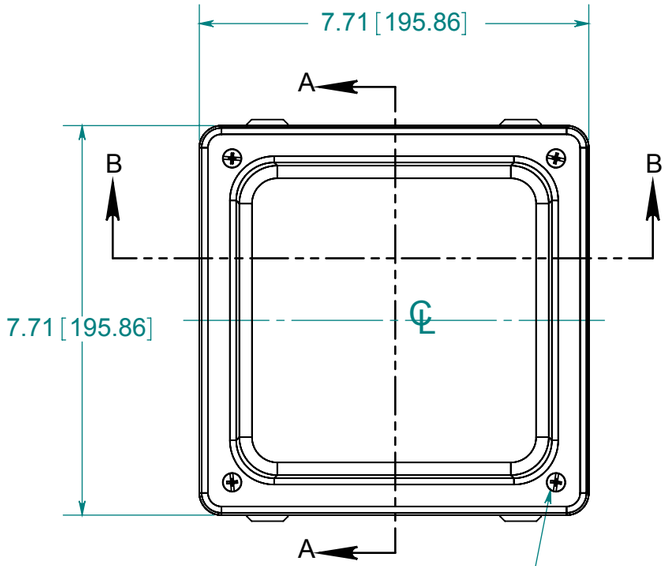

(4) EACH #10-32 BRASS INSERTS AND STAINLESS STEEL CAPTIVE COVER SCREWS WITH RETAINING O-RING

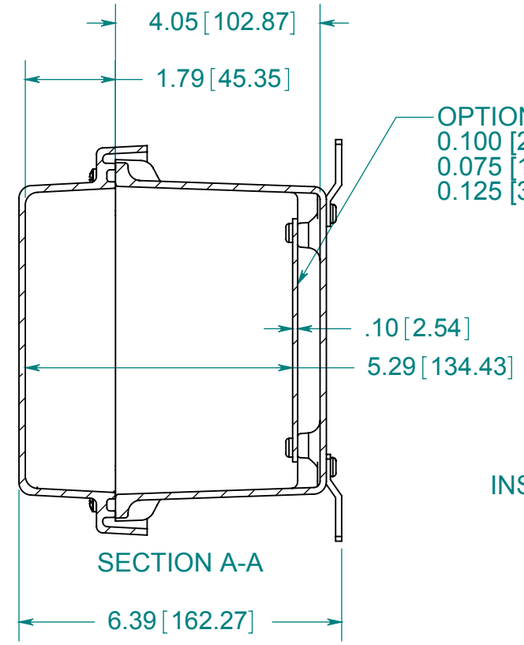

SECTION A-A

OPTIONAL BACK PANEL
0.100 [2.54] TH'K- ALUMINUM
0.075 [1.91] TH'K- WHITE STEEL & GALVANNEALED
0.125 [3.18] TH'K- FIBERGLASS

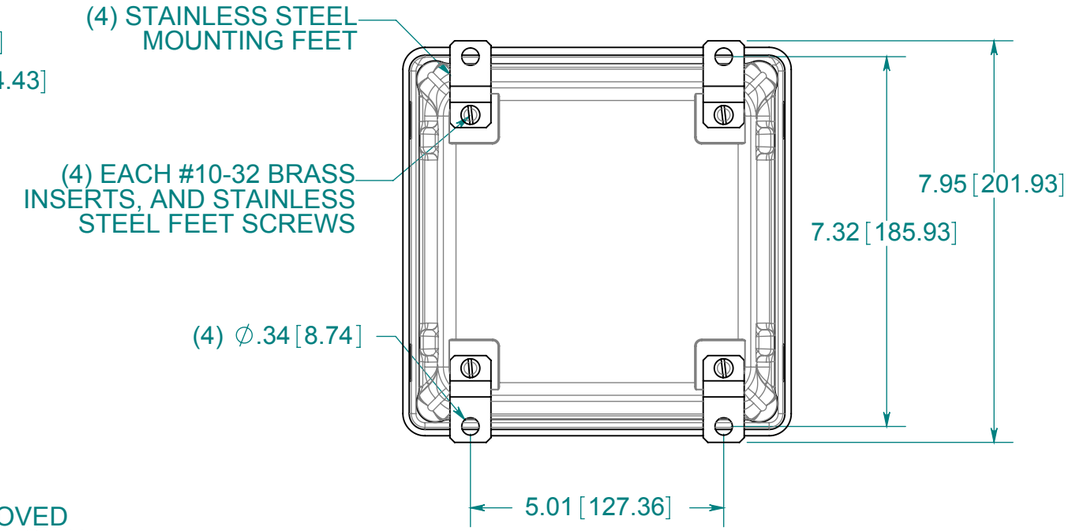

CLOSED CELL NEOPRENE GASKET

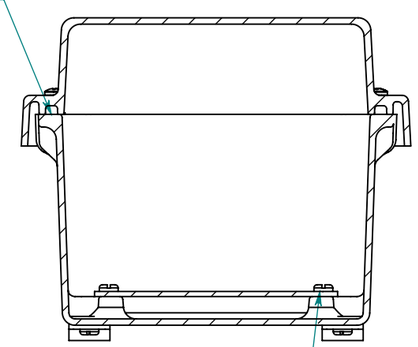

SECTION B-B

(4) EACH #10-32 BRASS INSERTS AND PLATED CARBON STEEL SCREWS

FRONT VIEW
WITH COVER REMOVED
AND BACK PANEL SHOWN

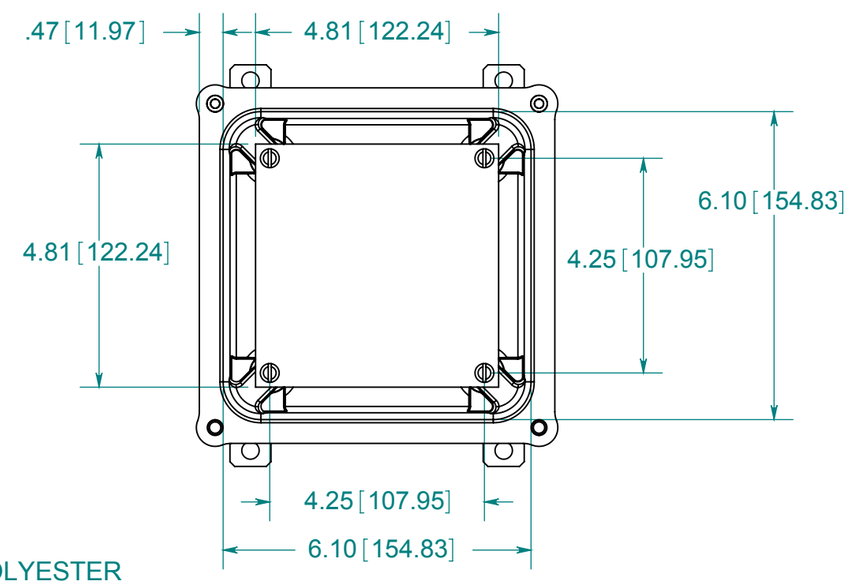

MATERIAL:
BOX- COMPRESSION MOLDED FIBERGLASS REINFORCED POLYESTER
COVER- COMPRESSION MOLDED FIBERGLASS REINFORCED POLYESTER
WINDOWS- POLYCARBONATE

PART No. PJ664R
for more information visit
www.hammfg.com
Data subject to change without notice

Drawing Not to Scale